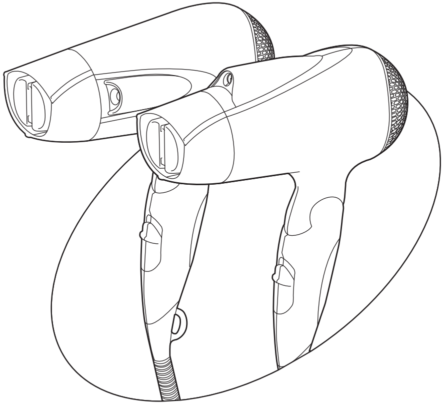

Panasonic

使用说明书
Operating Instructions
电吹风
Hair Dryer

型号 Model No. **EH-NE50/EH-NE32**

中文	2
English	6

在使用前，请仔细阅读此说明书并妥善保管，以备将来参考。

Before operating this hair dryer, please read these instructions completely and save this manual for future use.

中文

安全说明

使用电吹风前请先阅读安全说明。该安全说明能帮助您安全正确地使用电吹风，避免您伤害自己或他人。

警告：如果不遵守下列说明，可能会造成火灾、烫伤、短路或触电事故。

1. 不要在手湿的情况下使用电吹风。不要把电吹风放置或存放在靠近水槽、有水或其它盛有液体、高度潮湿的地方。

警告：不要在盛水的浴缸、淋浴、洗脸盆或其它器皿附近使用本电吹风。

禁止在洗澡和淋浴时使用。

警告：电吹风上的该标志表示“请勿在靠近水的地方使用本电吹风”。请勿在浴缸、淋浴器、水盆或其他盛水容器旁使用本电吹风。

2. 电吹风必须使用标准的电源插座，并且检查插座的输出电压，同时要与其它电器分开使用。
3. 要确保所使用的电压与本机标明的额定电压相符合。
4. 绝对不能在电吹风启动的情况下离开。
5. 使用完毕或使用中遇到停电时，必须从插座上拔下插头。拔出插头时，必须捏住插头从插座上拔出。
6. 假如电吹风在运转时出现断断续续的情况，这时请立即停止使用。
7. 不要用力拉扯电源线，不要损坏或改装电源线。假如电源线或插头损坏或变热，请立即停止使用。
8. 避免摔落电吹风或让电吹风受到强烈的撞击。
9. 不要在石油气或其它易燃品（例如挥发剂、涂料稀释剂、喷雾剂等）附近使用电吹风。
10. 电吹风必须安装固定在洗澡或淋浴时触及不到的地方并且电吹风的安装固定须保证手持部分在完全拉直时，洗澡和淋浴仍无法触及。
11. 在浴室内使用时，使用后拔下插头，因为即使电吹风断电后，接近水仍存在危险，为了保障您的安全，建议在浴室供电的电气回路中安装一个额定漏电动作电流不超过 30mA 的漏电保护装置（RCD）。向 RCD 安装商咨询。
12. 不要使用稀释剂、苯和其它溶解剂来清洁电吹风。
13. 在使用中小心不要让头发卷入入风口，不要把外物插入出风口和入风口，否则会导致机械损坏或触电。如在使用过程中入风口或出风口被堵塞时，可能导致加热器或者电吹风不能工作。假如出现这种情况，请立即停止使用，切断电源开关并拔下插头，清除入风口或出风口的堵塞物。让电吹风冷却几分钟后，如果再次接通电源不能恢复正常工作时，请联系 Panasonic 授权维修中心修理。
14. 在使用过程中，护发快干风嘴可能会变热，请注意使用。
15. 不要直接将气流吹向眼睛或其它敏感部位。
16. 本品不宜供肢体、感官或精神上有残疾者、缺乏经验和知识者（包括儿童）使用，除非有人对此类人加以监督或者对本品的使用加以指导，且对使用者的安全能承担责任。
17. 请妥善处理本产品的包装袋，避免婴幼儿窒息等意外发生。请将电吹风置于儿童触摸不到的地方。请对儿童进行监督，避免其将本品视为玩具，引发危险。
18. 如果护发快干风嘴或电吹风受损，请勿使用。

EH-NE50_CH.indb 2 2009/05/22 10:33:01

19. 不要将电吹风用于吹干头发和整发以外的其他用途。（如：吹干鞋子和衣物等用途，否则可能会引起外壳受热变形）
20. 不要把非本公司提供的任何附件与本电吹风连用。
21. 本电吹风仅供家庭使用。
22. 下述人不容易出现负离子的效果
   • 天然卷发的人
   • 头发容易卷曲的人
   • 发质本身很好，不易凌乱的人
   • 负离子烫发未超过 3-4 个月的人
   • 短发的人
23. 负离子在产生时会有异味发生，这种异味对身体健康是没有任何危害的。
24. 使用时请让头发距离入风口 10 厘米以上。（图 1）
   *否则可能会导致头发被吸入电吹风内。
25. 请注意电吹风的朝向并且不要使入风口距离头发太近。（图 2）
   *出风口和头发之间请保持 3 厘米以上距离。
26. 请妥善保管本使用说明书。

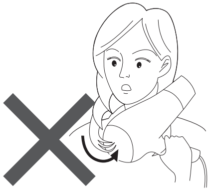

（图 1）

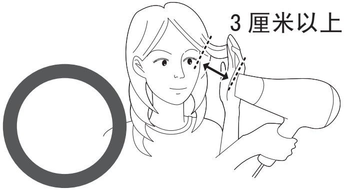

（图 2）

部件名称

EH-NE50

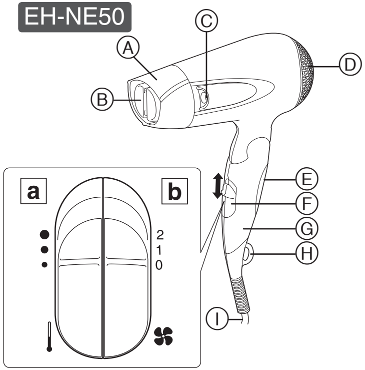

Ⓐ 护发快干风嘴
Ⓑ 出风口
Ⓒ 负离子发射口（双侧）
Ⓓ 入风口
Ⓔ 负离子感应板
Ⓕ 开关
Ⓖ 手柄
Ⓗ 挂环
Ⓘ 电源线

EH-NE32

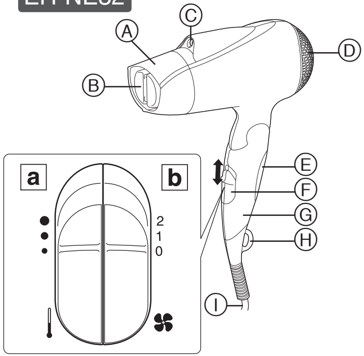

Ⓐ 护发快干风嘴
Ⓑ 出风口
Ⓒ 负离子发射口
Ⓓ 入风口
Ⓔ 负离子感应板
Ⓕ 开关
Ⓖ 手柄
Ⓗ 挂环
Ⓘ 电源线

中文

如何使用电吹风

a 温度选择开关（🌡）	b 电源开关（✤）
●：热风	2：强风
●：健康风（暖风）	1：柔风
•：冷风	0：关

●使用方法

1. 在使用电吹风之前，请先将电源开关设置在 [0] 位置，然后插入电源插头，并打开电源开关。
2. 洗发后，如果使用冷风吹发时，请将电源开关设置在 [1] 或 [2] 的位置，并将温度选择开关设置在 [● 冷风] 位置。如想将头发迅速吹干，请按照图中所示的方向调整护发快干风嘴，或者将温度选择开关设置在 [● 健康风] 或 [● 热风] 的位置。

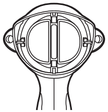

EH-NE50

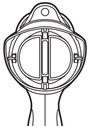

EH-NE32

注意

- 电源开关设置在 [1] 或 [2] 的位置时，才会产生负离子，但肉眼无法见到负离子。
- 当手握住负离子感应板时，有利于更多的负离子持续渗透到发芯中补充水分，滋润头发，使负离子效果更加显著。
- 如果您担心发质受损，使用前请将开关分别调到 [● 健康风] 和 [1] 的位置。

●Panasonic 负离子技术

Panasonic 电吹风用负离子来减少静电积聚，让水分渗入发芯中，时刻保持秀发亮丽。
注意：下述人不容易出现负离子的效果

- 天然卷发的人
- 头发容易卷曲的人
- 发质本身很好，不易凌乱的人
- 负离子烫发未超过 3-4 个月的人
- 短发的人

电吹风的修理和维护

1. 请勿自行修理、拆卸或改装电吹风。
2. 如果电源线或插头损坏，为避免危险，请立刻停止使用，并联系 Panasonic 授权的维修中心进行更换。
3. 如果使用热风时吹出的风经常变冷，并且电吹风内部时而见到火花。请咨询或者联系 Panasonic 授权的维修中心进行维修。
4. 如果火花出现在负离子发射口内，则可能是电极变脏，导致异常放电引起的。如果出现这种情况，请尝试按照以下清洁方法清洁负离子发射口内的部件。

●清洁方法

清洁前请关闭电源并拔下电源插头。
负离子发射口内有一根针，请用棉球轻轻擦拭（约 5 次）该部件的尖端部分。
我们建议您使用婴儿专用的细棉球。虽然普通棉球也能使用，但它们很难插入发射口。
请勿用硬物清洁或触碰负离子发射口内的部件，以免导致其变形，影响负离子的发射及产生危险。

型号规格

产品名称：电吹风
产品型号：EH-NE50/EH-NE32
额定电压：a.c 220 V ～ 50 Hz
额定功率：

温度选择开关 / 电源开关	● 热风	● 健康风	● 冷风
2 强风	1600 W	1050 W	160 W
1 柔风	1000 W	550 W	85 W

电吹风尺寸：84（宽）× 185（深）× 212（高）毫米 EH-NE50
76（宽）× 185（深）× 218（高）毫米 EH-NE32
附件：护发快干风嘴
原产地：中国
生产日期：请见商品上刻印
执行标准：GB4706.1　GB4706.15　GB4343.1
GB17625.1　Q/SXDGWB 7
注：以上规格若有变更，恕不另行通知。

注意！
若不遵守以下安全措施可能会导致手指受伤。

Ⓐ展开手柄时

握住手柄或使用电吹风时，切勿接触下图中的阴影部分。

Ⓑ折叠手柄时

折叠手柄时，切勿接触下图中的阴影部分。

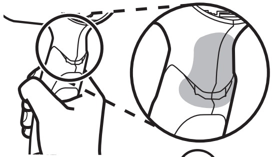

Ⓐ

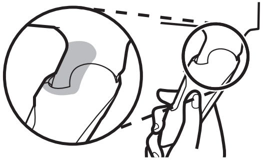

Ⓑ

Safety Instructions

Please read the safety instructions before using this hair dryer. The safety instructions explained here help you to use this hair dryer safely and correctly, and also to prevent you from injuring yourself or others.

WARNING: Not following the instructions below may cause fire, burns, explosion, short circuiting or electric shock.

1. Do not use the dryer with wet hands or in the bath or shower. Do not use this hair dryer near water contained in bath-tubs, basins or other vessels. Do not leave or store the dryer near a tub, sink or other place where it will be exposed to water and other liquids or high humidity.

Do not use the dryer in a bath or shower.

WARNING: This symbol on the hair dryer means “Do not use this hair dryer near water”. Do not use this hair dryer near bathtubs, showers, basins or other vessels containing water.

2. The electric power supply should come from a properly wired outlet. Also, check the capacity of the outlet and use the dryer separately from other equipment.
3. Always ensure the voltage to be used corresponds to the voltage stated on the unit.
4. Never leave the dryer running.
5. After use or power cut, unplug it from the outlet. When unplugging, always grasp the plug and unplug it from the outlet.
6. If the dryer blows air intermittently, discontinue use immediately.
7. Do not pull the cord with unnecessary force. Do not damage or modify the cord. If the cord or plug is damaged or gets hot, discontinue use of the dryer immediately.
8. Avoid dropping the dryer or subjecting it to other excessive shock.
9. Do not use the dryer near gas or other inflammable materials (such as benzine, paint thinner, sprays, etc.).
10. As the handle of the hair dryer incorporates electrical components, the hair dryer must be kept away from a person using a bath or shower when the handle is extended.
11. When the hair dryer is used in a bathroom, unplug it after use since the proximity of water presents a hazard even when the hair dryer is switched off.
12. For additional protection, the installation of a residual current device (RCD) having a rated residual operating current not exceeding 30 mA is advisable in the electrical circuit supplying the bathroom. Ask your installer for advice.
13. Do not use thinner, benzine or other solvents when cleaning the dryer.

EH-NE50_CH.indb 6 2009/05/22 10:33:03

14. Be careful that hair is not sucked into the air inlet during use. Never insert foreign objects into the air inlet or outlet. Mechanical damage or shock can result. If the air inlet or outlet is blocked during use, the heater block or dryer may not operate. After removing the blockage from the air inlet or outlet, wait several minutes and the hair dryer should operate again. If not, please contact an authorized Panasonic service center.
15. During use, be careful of the healthy quick drying nozzle, which will become hot.
16. Do not direct the airflow towards the eyes or other sensitive areas.
17. Please properly handle the product packaging bags to avoid accidents, such as infant and child choking. This appliance is not intended for use by persons (including children) with reduced physical, sensory or mental capabilities, or lack of experience and knowledge, unless they have been given supervision or instruction concerning use of the appliance by a person responsible for their safety. Children should be supervised to ensure that they do not play with the appliance.
18. If the healthy quick drying nozzle or hair dryer is damaged, stop using it.
19. Do not use the hair dryer for purposes other than drying and styling human hair.
20. Do not use any attachments with this dryer other than those supplied by Panasonic.
21. This appliance is designed only for household use.
22. The effect of ion dose not show up too much on person with features described below.
    - Having original curl hair.
    - Having hair to be furled easily.
    - Having wonderful and tidy hair.
    - Having hair straightening perm no more than 3-4 months.
    - Having short hair.
23. Some odd smell will come along with ion emission, but it does not do harm to health at all.
24. **Keep your hair over 10 cm away from the air inlet during use.** (Fig. 1)
    * Failure to do so may result in your hair becoming sucked in and trapped in the hair dryer.
25. **Be careful of how you point the hair dryer and do not get the air inlet too close to your hair.** (Fig. 2)
    * Please keep a distance of over 3 cm between the air outlet and your hair.
26. Please keep the instructions well.

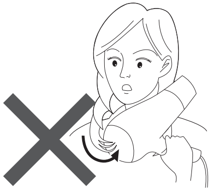

(Fig. 1)

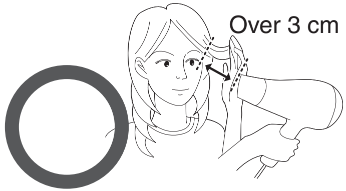

(Fig. 2)

English

Parts Identification

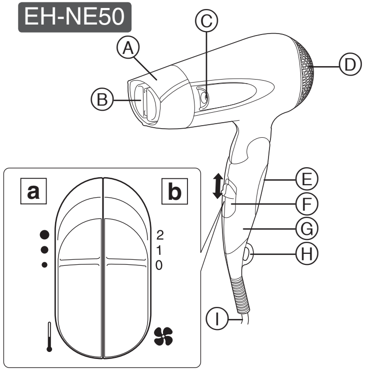

Ⓐ Healthy quick drying nozzle
Ⓑ Air outlet
Ⓒ Negative ion outlet (one on either side)
Ⓓ Air inlet
Ⓔ Ion charge panel
Ⓕ Switch
Ⓖ Handle
Ⓗ Ring for hanging
Ⓘ Cord

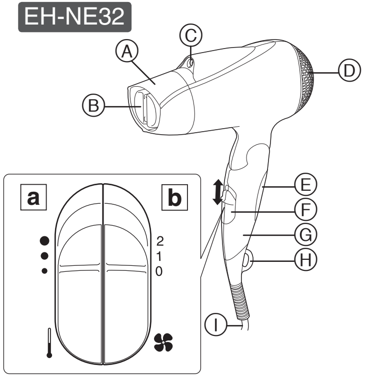

Ⓐ Healthy quick drying nozzle
Ⓑ Air outlet
Ⓒ Negative ion outlet
Ⓓ Air inlet
Ⓔ Ion charge panel
Ⓕ Switch
Ⓖ Handle
Ⓗ Ring for hanging
Ⓘ Cord

How to use the hair dryer

a Temperature Selector (🌡)
- ● : Hot air
- ● : Healthy (warm) air
- • : Cool air

b Main Switch (✤)
- 2: Dry (Strong airflow)
- 1: Set (Gentle airflow)
- 0: Off

● Method of use

1. Before using the hair dryer, first set the main switch to position “0”, then plug into a power outlet and turn on the main switch.
2. After washing your hair, if you use cool air to dry your hair, set the main switch to position “1” or “2” and set the temperature selector switch to the “• cool air” position. If you want to dry your hair quickly, set the healthy quick drying nozzle in the direction shown in the illustration or set the temperature selector to the “● healthy air” or “● hot air” position.

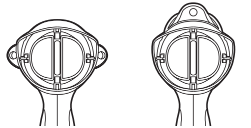

EH-NE50 EH-NE32

EH-NE50_CH.indb 8 2009/05/22 10:33:03

Notes:

- When the main switch is set to position “1” or “2”, negative ions, which are invisible to the naked eye, are produced.
- Gripping the ion charge panel has the benefit of more negative ions continuing to penetrate into the hair, supplementing the moisture content, moistening the hair and giving clearer results in relation to the negative ions.
- If you are worried about damaging your hair, set the switches to the “● healthy air” and “1” position respectively prior to use.

● Panasonic Ionic Technology

The Panasonic Hair Dryer uses negative ions to reduce the build-up of static electricity and help to keep your hair in excellent condition by allowing moisture to penetrate into hair.

Notes - The effect of ion dose not show up too much on person with features described below.

- Having original curl hair.
- Having hair to be furled easily.
- Having wonderful and tidy hair.
- Having hair straightening perm no more than 3-4 months.
- Having short hair.

Repair and Maintenance of the Hair dryer

1. Only qualified personnel should repair or disassemble the hair dryer.
2. If the supply cord is damaged, it must be replaced by the manufacturer, its service agent, or similarly qualified persons in order to avoid a hazard.
3. If air frequently becomes cold when using hot air, or sparks are sometimes seen inside the hair dryer, please seek advice or contact an authorized Panasonic service center for repair.
4. If sparks occur inside the negative ion outlets, this may be due to the electrodes becoming dirty, resulting in abnormal discharge. If this happens, clean the parts of the inside of the negative ion outlets in accordance with the cleaning method below.

● Cleaning method

Clean only after turning off the power and removing the power cord from the power outlet.

Use a cotton swab to lightly rub (about 5 times) the point of the needle that is inside the negative ion outlets.

We recommend the thin cotton swabs made for use with babies. Although regular cotton swabs will work, they may be hard to insert into the outlets.

Do not use hard objects to clean, or allow hard objects to come into contact with, the parts of the negative ion outlets so as to avoid causing them to become deformed, which would affect the discharge of negative ions and be dangerous.

Specifications

Product Name: Hair Dryer
Model No.: EH-NE50/EH-NE32
Rated Voltage: a.c 220 V ~ 50 Hz
Rated Power:

Temperature Selector / Main Switch	● Hot air	● Healthy air	● Cool air
2 Strong airflow	1600 W	1050 W	160 W
1 Gentle airflow	1000 W	550 W	85 W

Dimensions: 84 (W) × 185 (D) × 212 (H) mm EH-NE50
76 (W) × 185 (D) × 218 (H) mm EH-NE32
Accessory: Healthy quick drying nozzle
Place of Origin: China
Date of Production: Please see engraving on the commodity
This hair dryer is applied to:
GB4706.1 GB4706.15 GB4343.1
GB17625.1 Q/SXDGWB 7
Note: The above specifications may be subject to change without prior notice.

CAUTION!

Failure to follow these safeguards could result in injury to fingers.

Ⓐ When extending the handle

DO NOT TOUCH the shaded area in the diagram below when holding the handle or using the hair dryer.

Ⓑ When retracting the handle

DO NOT TOUCH the shaded area in the diagram below when retracting the handle.

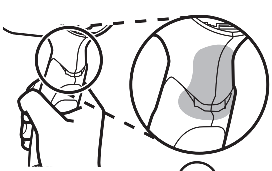

Ⓐ

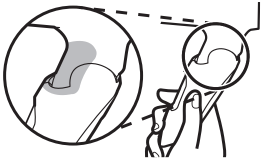

Ⓑ

English

EH-NE50_CH.indb 10 2009/05/22 10:33:04

MEMO

MEMO

Panasonic

保修证

保修条款

有关保修期内Panasonic商品的保修（无偿修理），从购入之日起开始实施。

1.保修期内的商品只可在Panasonic认定维修店进行保修；保修时，请出示本保修证及购机发票。
  以下两点需特别注意：
  a. 本保修证遗失后不再补发，请妥善保管。
  b. 本保修证仅限于中华人民共和国国内有效(香港、澳门、台湾三地区暂不可使用)。

2.自购入之日起在以下期间内，在正常使用中发生故障的情况下进行保修。

- 整机（除商用产品）・・・・・2 年内无偿
- 整机（商用产品）・・・・・・6 个月
- 内刀头、外刀网、刀头、辅助装置、附件 ・・・・・ 有偿提供

3.属下列情况之一者，即使在保修期内，也不能以保修对待，但是可以实行收费修理：
  a. 未按商品使用说明书要求使用、维护、保管而造成损坏的；
  b. 因不正确操作、电源不正常、破损（如：摔落等）而造成损坏的；
  c. 不经Panasonic认定维修店维修人员拆动造成损坏的；
  d. 不能出示本保修证及有效购机发票的；
  e. 保修证上记录的信息与商品实物标识不符或者涂改的；
  f. 因不可抗力因素（如雷电、地震、火灾、水灾等）造成损坏的。

4.本保修条款只适用于消费者个人为生活消费需要而购买使用的场合，不适用于经营性等使用。

[商品信息]

商品名称: **电吹风**　　产　地: 中国·广州

商品型号: EH-NE50/EH-NE32　　制造编号:

[保修回执] 以下回执是保修的重要依据，请勿自行撕下

商品型号: EH-NE50/EH-NE32　　制造编号:　　保修结算 4

商品型号: EH-NE50/EH-NE32　　制造编号:　　保修结算 3

商品型号: EH-NE50/EH-NE32　　制造编号:　　保修结算 2

商品型号: EH-NE50/EH-NE32　　制造编号:　　保修结算1

商品型号: EH-NE50/EH-NE32　　制造编号:　　促销员留存

保修证管理编码印刷处：

本保修证内容如有变更恕不另行通知

[销售记录] 未完整记录以下信息将可能无法进行保修

销售日期: ________ 发票号码: ________ **安装调试日期：** 销售店（盖章）

顾客姓名: ________ 联系电话: ________

顾客地址: ________ 邮　编: ________

销售店名称: ________ 销售店电话: ________

销售店地址: 邮　编:

[维修记录]

维修店名称: ________ 联系电话: ________ 送修日: ________

维修店地址：________ 邮　编: ________

故障内容: ________ 故障原因: ________

维修内容: ________

维修员签字: 交验日期:

维修店名称: ________ 联系电话: ________ 送修日: ________

维修店地址：________ 邮　编: ________

故障内容: ________ 故障原因: ________

维修内容: ________

维修员签字: 交验日期:

维修店名称: ________ 联系电话: ________ 送修日: ________

维修店地址：________ 邮　编: ________

故障内容: ________ 故障原因: ________

维修内容: ________

维修员签字: 交验日期:

Panasonic客户咨询服务中心：
400–810–0781；800–810–0781 (固定电话)
Panasonic官方网站：http://panasonic.cn

松下电器 (中国) 有限公司

MEMO

松下电工 • 万宝电器(广州)有限公司 (PEWWBG)
Panasonic Electric Works Wanbao (Guangzhou) Co., Ltd.

工厂地址: 广州市番禺区市广路万宝基地
(Address): Wanbao Base, Shiguang Road,
Panyu District, Guangzhou
电话(Tel): (020)84770333
传真(Fax): (020)84773033
邮政编码(Post Code): 511495
原产地: 中国

中国印刷
Printed in China
0000000000 X0509-0
发行：2009 年 5 月

Ⓕ CH, EN